CE-8631EX1

FUJITSU TEN SERVICE MANUAL

AM-FM MPX. RADIO WITH ELECTRONIC TUNER and CASSETTE TAPE PLAYER

D11 (CE-8631EX1)

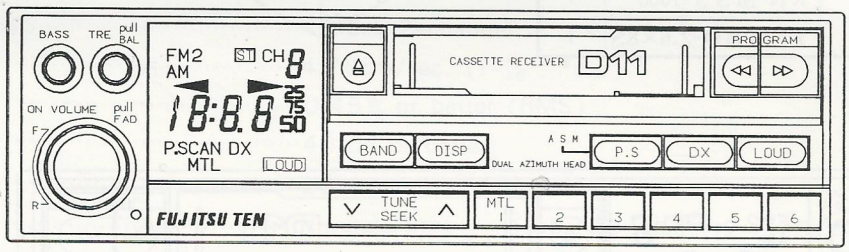

TABLE OF CONTENTS

	PAGE
COMPOSITIONS, PACKING VIEW, CONNECTIONS	2
SPECIFICATIONS	3
HOOK-UP, EXPLANATION OF FR/CL SWITCH	4
SCHEMATIC	5, 6
WIRING ON PC BOARD	7, 8
EXPLODED VIEW	9
EXPLODED VIEW (CASSETTE DECK)	10
EXPLANATION ON IC TERMINALS	11~13
SEGMENT, PLAYBACK HEAD ADJUSTMENT, ALIGNMENT	14
REPLACEMENT PARTS LIST	15~19

NOTE: AM/FM ALIGNMENT ..... Refer to SM-676.

FUJITSU TEN

COMPOSITIONS

Packing No.	ITEM	Stock No.	Q'ty
①	Main unit	CE-8631	1
②	Package	RN-MZF-5477	1
③	Poly form	RN-MZB-1538	1
④	Poly form	RN-MZB-1539	1
⑤	Lead assembly	RN-EWJ-5030	1
⑤	Lead assembly	RN-EWJ-5384	1
⑤	Spacer	RN-MSE-1812	1
⑤	Screw	F6-SSA-5×8S	4
⑤	Bolt	RN-MBW-D4×10S	1
⑤	Nut	RN-MNR-D6S	2
⑤	Screw	RN-MTN-A6×16	2
⑤	Special screw	RN-METT-1494	1
⑤	Special screw	RN-METT-144	2
⑤	Washer	F6-WN-4S	1
⑥	Escutcheon	RN-MDP-1920A	1
⑦	Bracket	RN-MBE-1904	1
⑧	Bracket	RN-MBF-1040	1
⑨	Owner's manual	RN-MXK-1072	1
⑩	Label	RN-MLP-1548	1
⑪	Spacer	RN-MSS-1006	1
⑫	Screw	F6-SBD-2.6×8S	1

PACKING VIEW

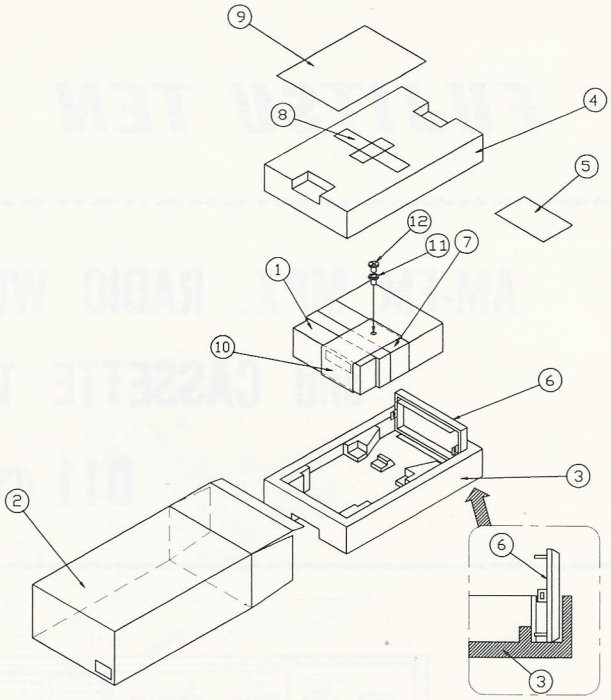

Fig. 1

CONNECTIONS

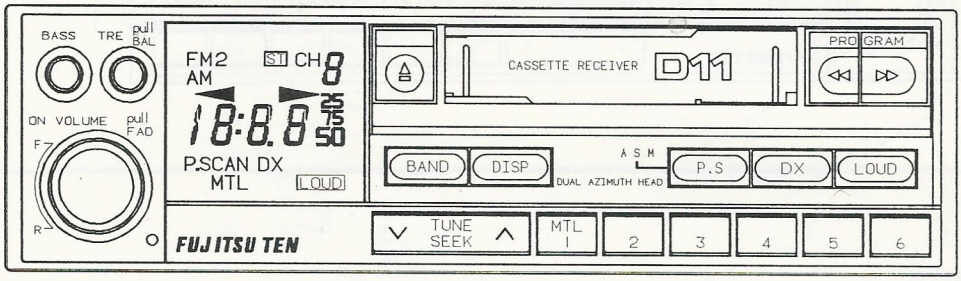

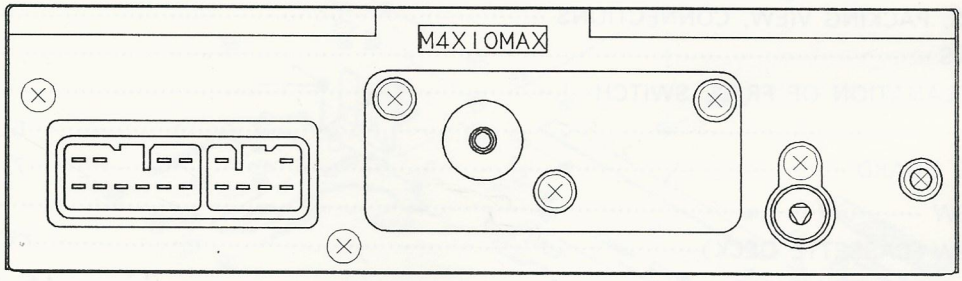

10P CONNECTOR (PIN VIEW)	
1	F-R(+)
2	F-L(+)
3	ACC
4	BACK UP +B
5	F-R(-)
6	F-L(-)
7	GND
8	ANT +
9	AMP+B
10	DIM

6P CONNECTOR (PIN VIEW)	
1	R-R(+)
2	R-L(+)
3	R-R(-)
4	———
5	———
6	R-L(-)

Fig. 2

SPECIFICATIONS

SM-677
[CE-8631EX1] D11

MAIN UNIT

(RADIO SECTION)	AM	FM
TUNING RANGE	522 to 1611 kHz	87.5 to 108.0 MHz
INTERMEDIATE FREQUENCY	450 kHz	10.7 MHz
SENSITIVITY (MAX.)	32 dBμ or better	18 dBμ or better (Stereo)
SENSITIVITY AT ELECTRONIC TUNING	Distant: 32±6 dBμ Local: Distant plus 20±6 dBμ	Distant: 20±6 dBμ Local: Distant plus 25±6 dBμ
LIMITING SENSITIVITY		3±5 dBμ
SIGNAL TO NOISE RATIO	21 dB or better (35 dBμ input)	50 dB or better (54 dBμ input) Stereo: 40 dB or better (54 dBμ input)
SEPARATION		25 dB or better
ELECTRICAL FIDELITY	100 Hz: 0±3 dB (74 dBμ input, Refer 400 Hz) 4 kHz: −15±6 dB (74 dBμ input, Refer 400 Hz)	100 Hz: 0±3 dB (54 dBμ input, Refer 400 Hz) 10 kHz: −11±5 dB (54 dBμ input, Refer 400 Hz)

(CASSETTE DECK SECTION)

NUMBER OF TRACKS	4-track 2-channel
TAPE SPEED	4.76cm/sec. (1-7/8", i.p.s.)
WOW & FLUTTER	0.45% or better (RMS)
CROSSTALK	40 dB or better
SEPARATION	25 dB or better
EQUALIZATION	Normal: t1=3,180 μsec., t2=120 μsec. Chrome and metal: t1=3,180 μsec., t2=70 μsec.
SIGNAL TO NOISE RATIO	46 dB or better (with MTT-150 test tape)
TAKE-UP TORQUE	40 to 75 g-cm

(COMMON SECTION)

POWER INPUT	12-volt car battery, negative terminal to ground
Voltage	13.2 VDC
Current	Approx. 1.0 amperes (0.5W×4), MPX 3.3 amperes
SEMICONDUCTORS	11 ICs, 40 Transistors, 32 Diodes, 2 FET
DIMENSIONS	178(W)×50(H)×145(D)mm (7", 3-31/32", 5-45/64")
WEIGHT	Unit−1.3 kg (2.9 lbs.)

NOTES: Unless otherwise noted specification is measured with balance and fader control at center.

HOOK-UP

4–Speaker System

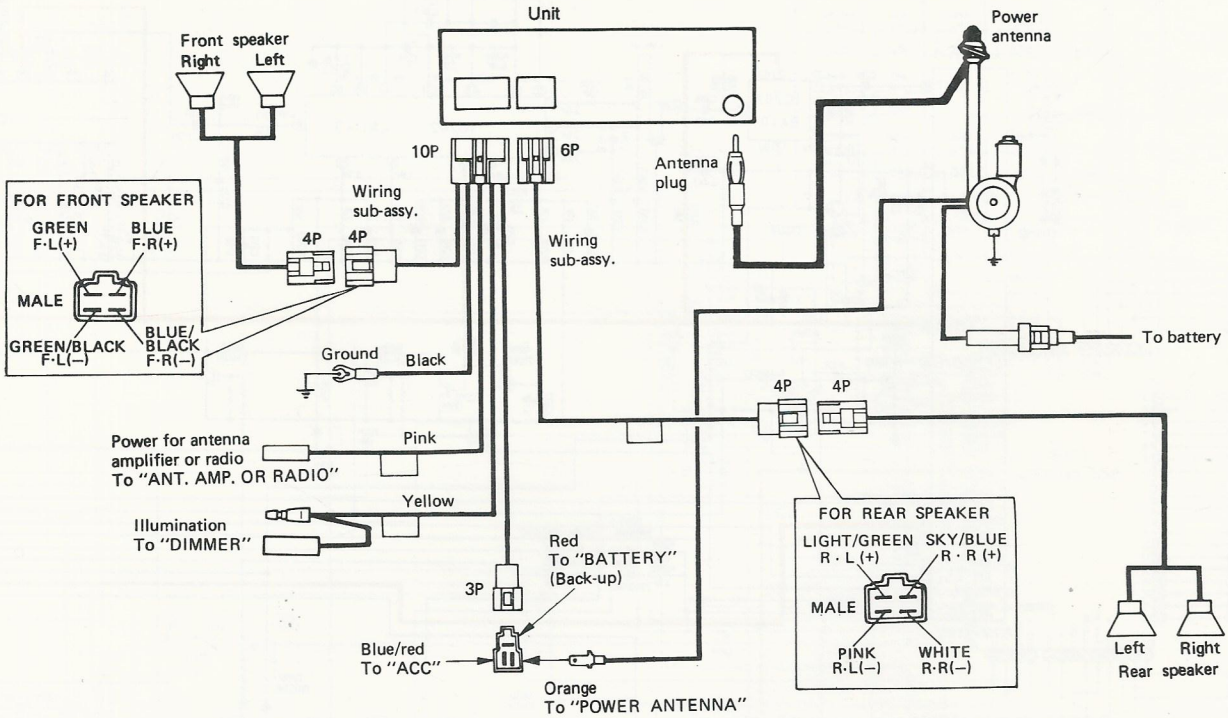

Fig. 3

EXPLANATION OF FR/CL SWITCH

The unit has a priority function for frequency display (FR) and clock display (CL).
Change the switch according to the table below.

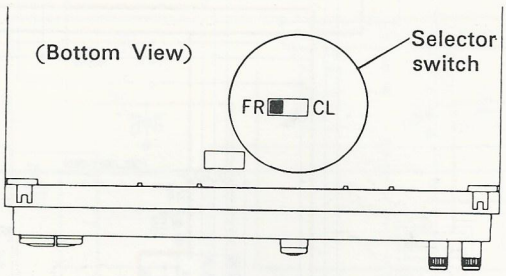

FR ■ CL Frequency Display Priority	During tape playback or radio reception, press the display button : the clock display mode is selected, and the current mode is returned to the initial display in approx. 5 seconds automatically.
FR ■ CL Clock display Priority	During radio reception, the clock is displayed. When the display button is depresed, the frequency display mode is selected, and this mode is returned to the initial clock display in approx. 5 seconds automatically.

Fig. 4

EXPLODED VIEW

SM-677
〔CE-8631EX1〕 D11

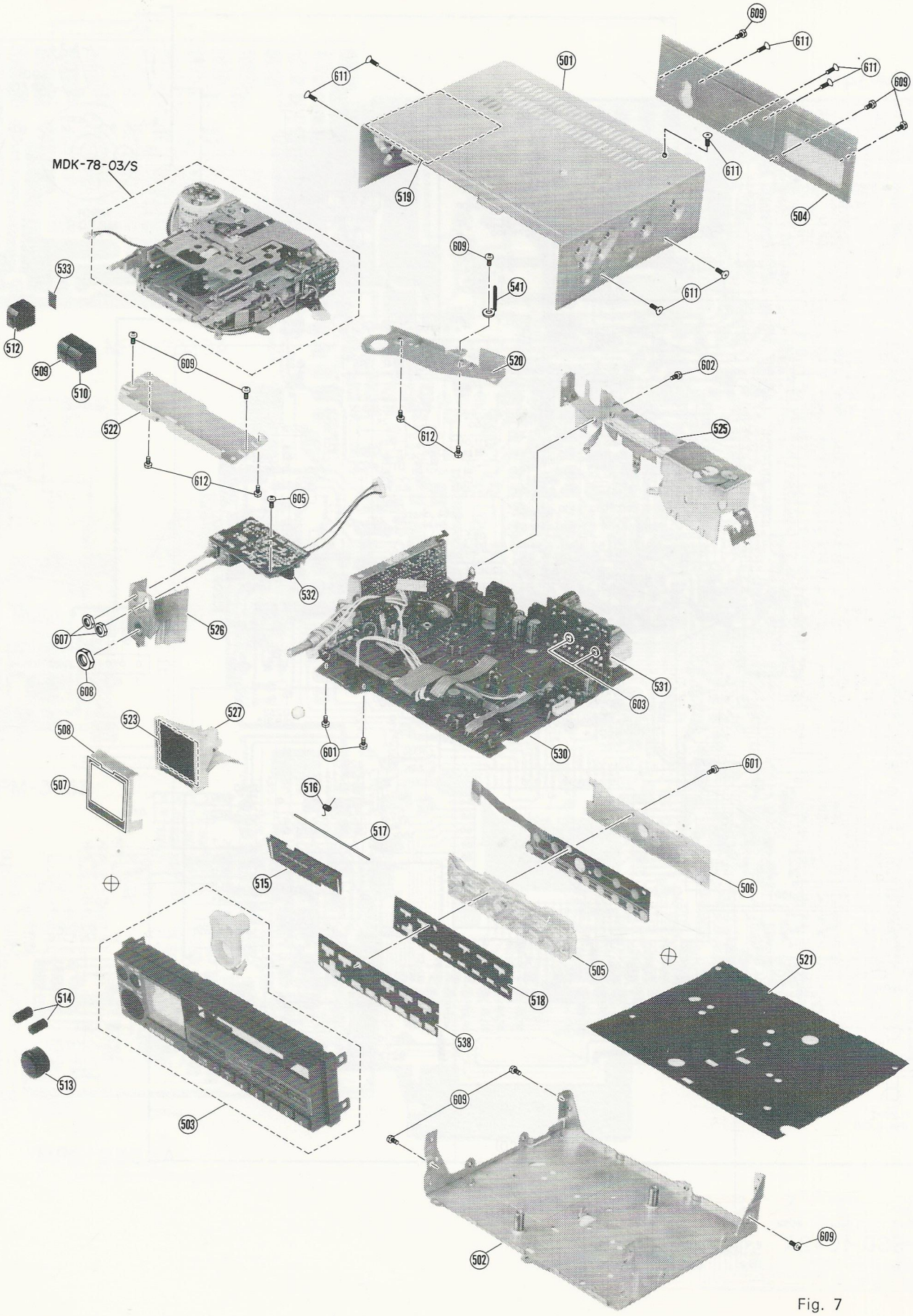

Fig. 7

NOTE : Printed circuit board does not include component parts to be mounted.

EXPLODED VIEW (DECK UNIT MDK-78-03/S)

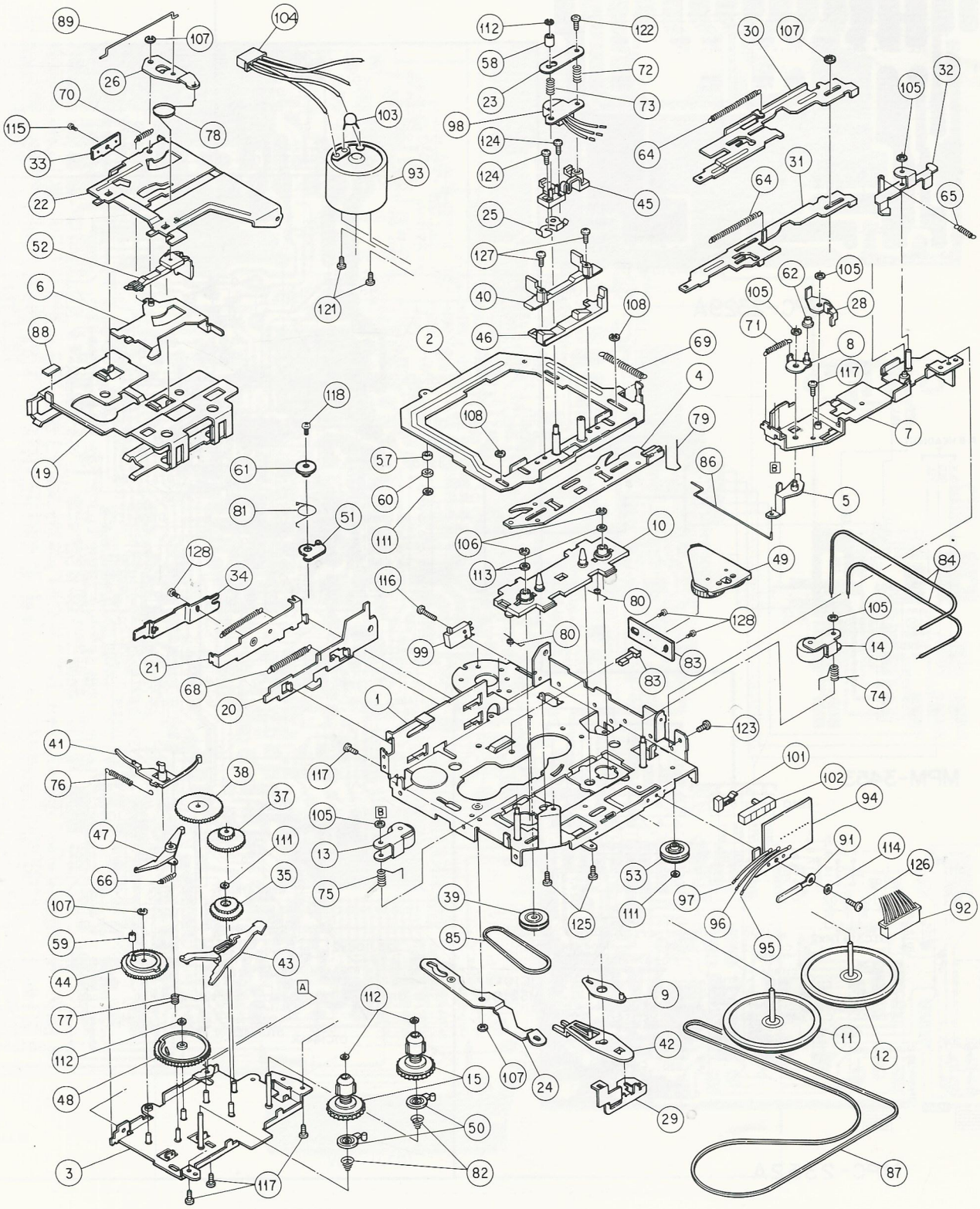

Fig. 8

EXPLANATION ON IC TERMINALS

IC 203 (AN7465S)

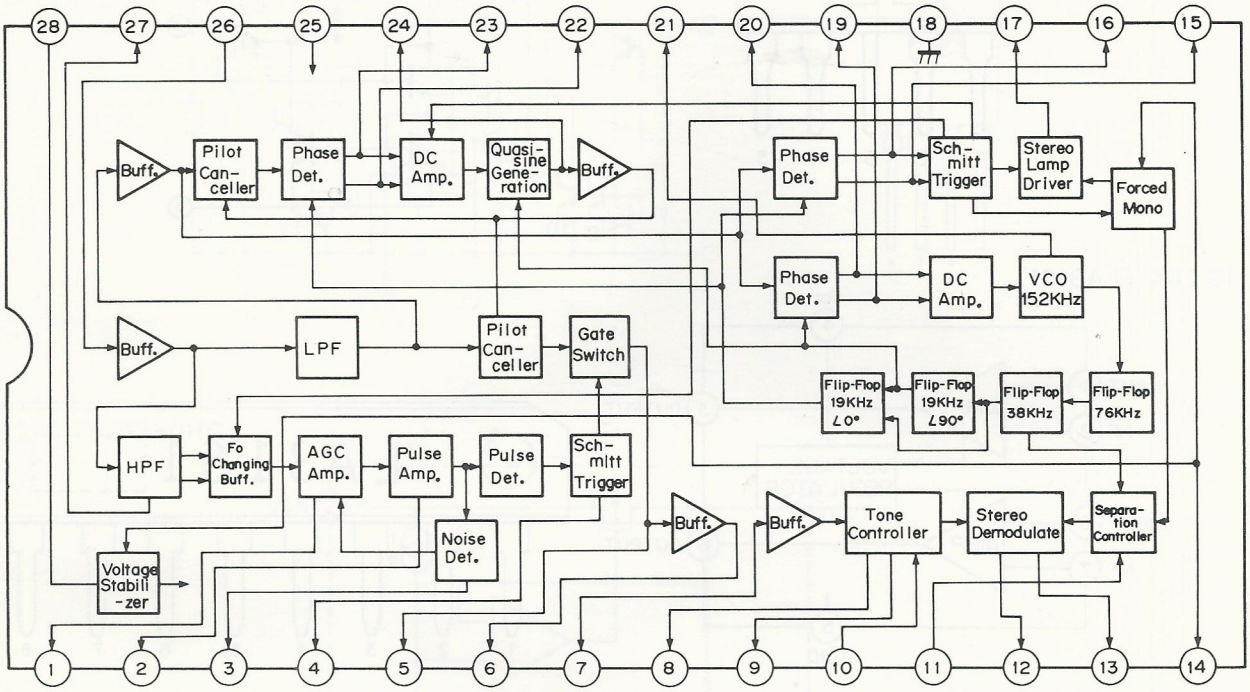

Fig. 9

Terminal No.	Explanation of Terminal	Terminal No.	Explanation of Terminal
1	Low-pass filter for noise amplification	15	Pilot detecting low-pass filter
2	Low-pass filter for noise amplification	16	Pilot detecting low-pass filter
3	Malfunction preventive AGC sensitivity time constant	17	Stereo lamp drive
4	Gate pulse width time constant	18	GND
5	Signal holding capacitor	19	PLL low-pass filter
6	Noise suppressing circuit signal output	20	PLL low-pass filter
7	Stereo demodulation signal input	21	VCO oscillation time constant
8	Low-pass filter for tone control	22	Pilot canceller control low-pass filter
9	Separation adjusting resistor	23	Pilot canceller control low-pass filter
10	Tone control terminal	24	Pilot canceller cancellation wave generating capacitor
11	Separation control terminal	25	VCC
12	Left signal output	26	Signal input
13	Right signal output	27	High-pass filter adjusting resistor
14	Forced monaural. VCO stop control terminal	28	Reference voltage

IC 201 (BA401)

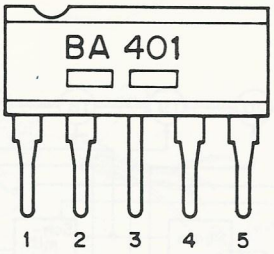

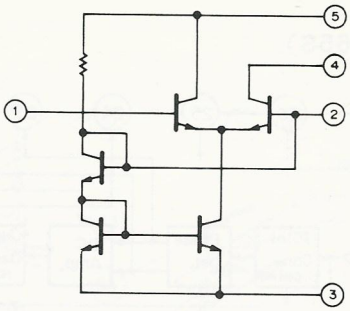

Fig. 10

IC 204 (LA3161)

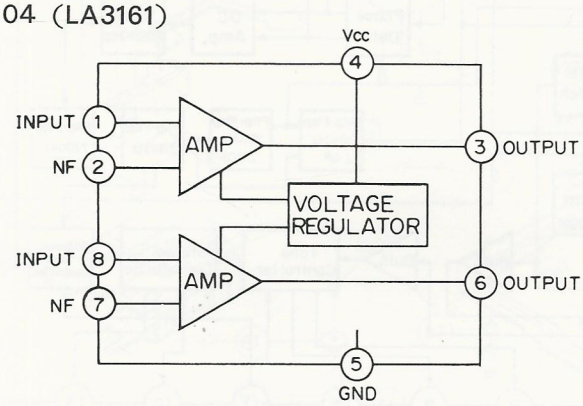

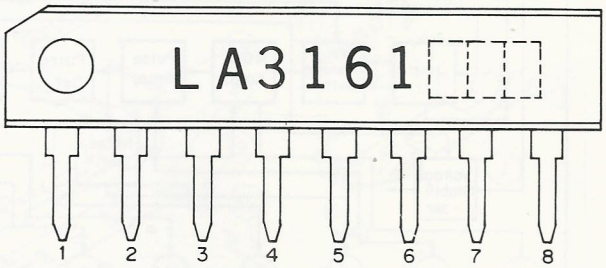

Fig. 11

IC 206 (BA4558)

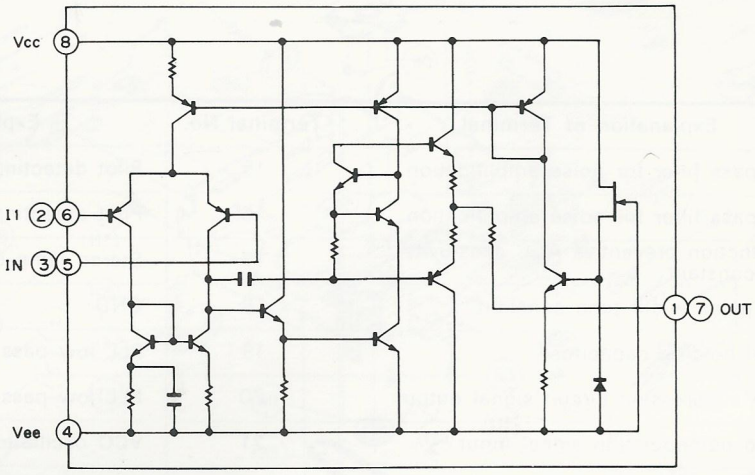

Fig. 12

IC 207, 208 (μPC1310V)

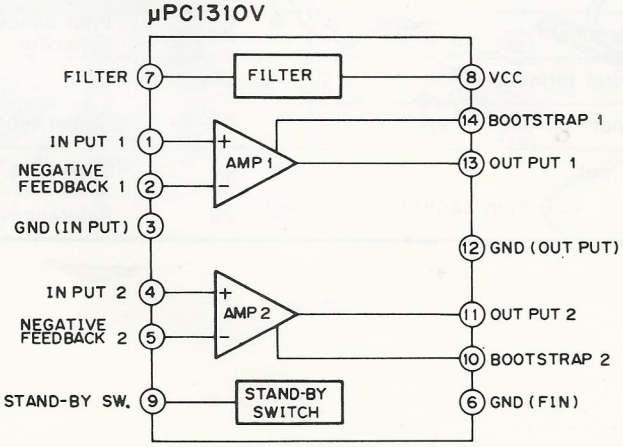

Fig. 13

IC 209 (AN6540)

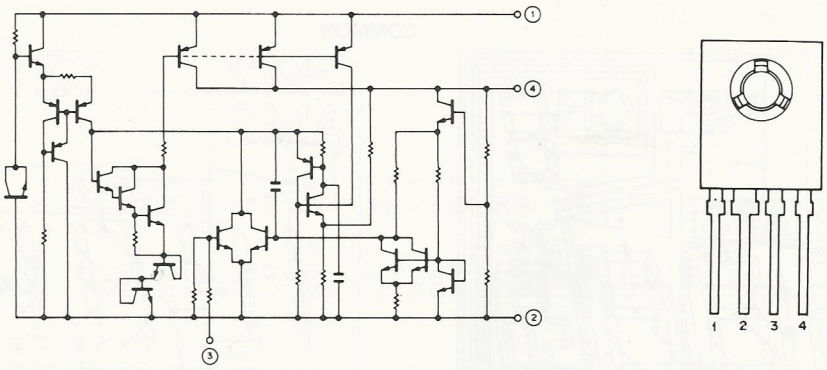

Fig. 14

IC 210 (S81250HG)

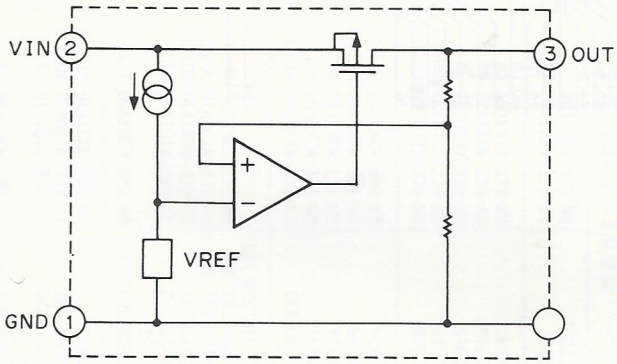

Fig. 15

IC 101 (M5218L)

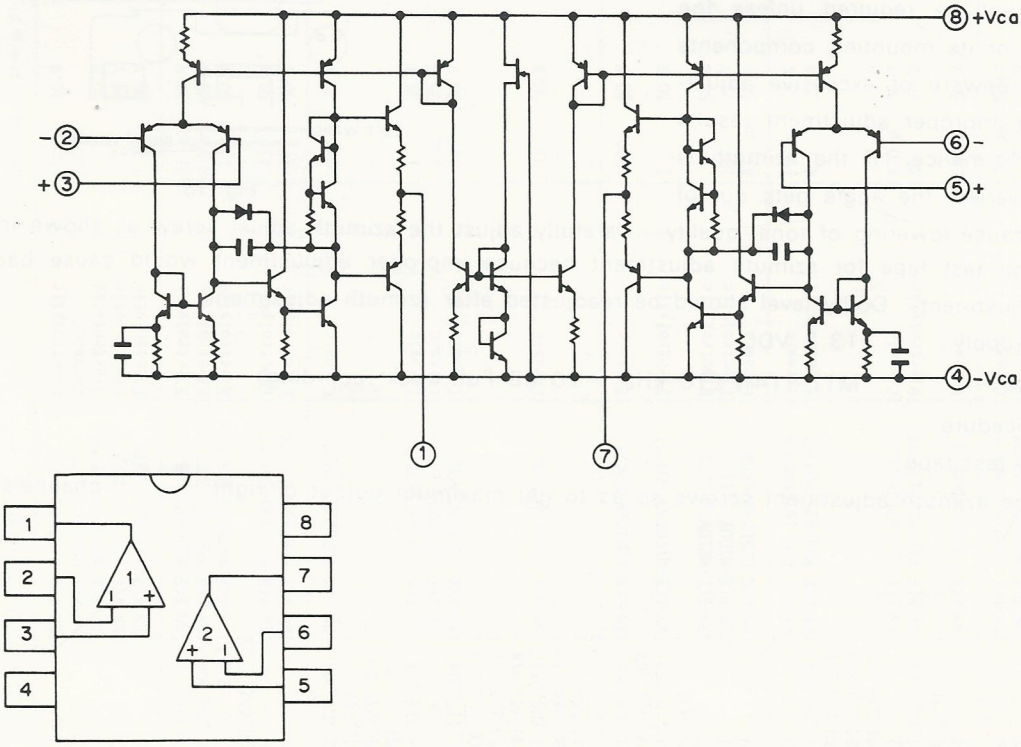

Fig. 16

SEGMENT

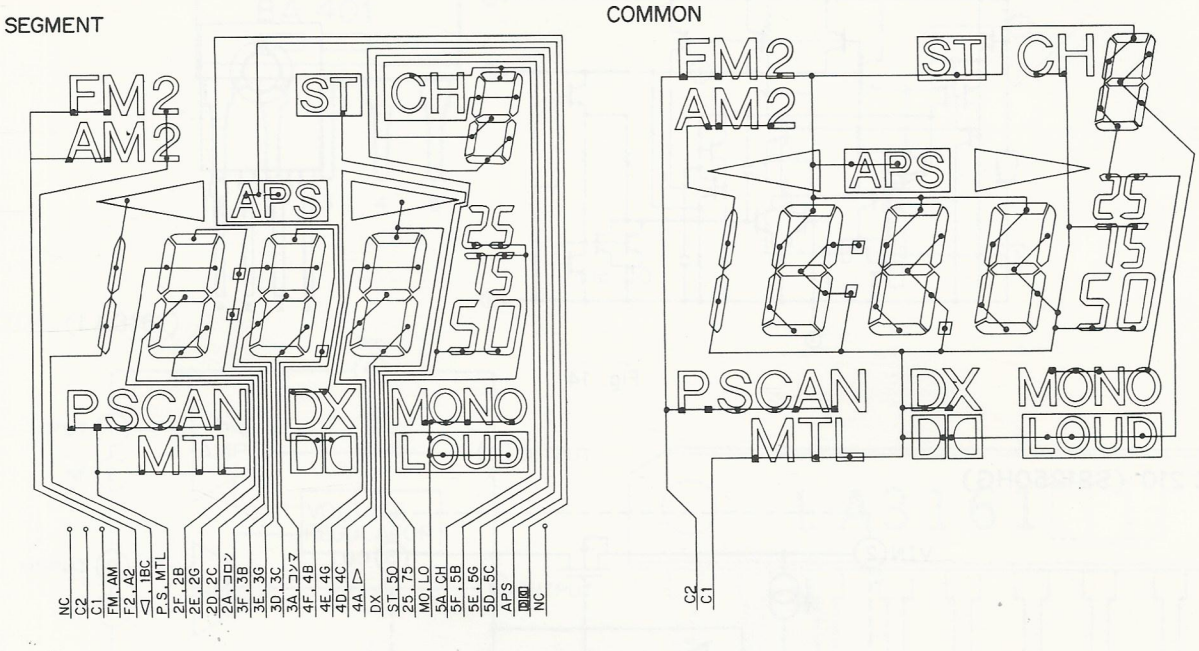

Fig. 17

PLAYBACK HEAD ADJUSTMENT (Azimuth)

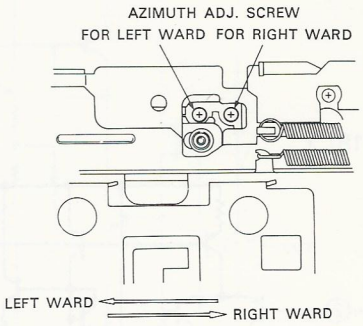

Fig. 18

Normally the playback head is precisely aligned at the factory and further adjustment should not be required unless the playback head or its mounting components are replaced. Beware of excessive adjustment. because improper adjustment results in inferior performance. If the azimuth is unnecessarily varied, the angle gets out of order, which cause lowering of tonal quality Carefully adjust the azimuth adjust screw as shown in Fig. 18. Always use the test tape for azimuth adjustment because improper adjuustment would cause bad effect on the Dolby level adjustment. Dolby level should be readjusted after azimuth adjustment.

a. Power supply : 13.2 VDC

b. Test tape : MTT-114N (10 kHz, −10 dB Full track recording)

Alignment Procedure

1. Insert a test tape.
2. Drive the azimuth adjustment screws so as to get maximum output of right and left channels in either track.

REPLACEMENT PARTS LIST

Note:Main replacement parts are marked O in the remarks column.

Symbol. No.	Stock No.	Parts name	Description Chip:(C)	Remark
CAPACITORS			Unit:μF, P=pF, F=F	
C1,300	RN-ECE-M152V16-1	Electrolytic	1500 16 V	
C2	RN-ECK-DB221KY	Ceramic	220 p	
C101	RN-ECE-M470V10-615/TT	Electrolytic	47 10 V	
C102,107	RN-ECE-M4R7V25-302/TT	Electrolytic	4.7 25 V	
C103	RN-ECE-M4R7V25-32/TT	Electrolytic	4.7 25 V	
C104,105	RN-ECE-M220V10-608	Electrolytic	22 10 V	
C106,274,306	RN-ECE-M4R7V25-7/TT	Electrolytic	4.7 25 V	
C108,111,225 228,232	RN-ECE-MR10V50-303/TT	Electrolytic	.1 50 V	
C109	RN-ECE-MR47V50-504/TT	Electrolytic	.47 50 V	
C110	RN-ECE-MR47V50-302/TT	Electrolytic	.47 50 V	
C112,207,208 212,216 236~238,256 257	RN-ECK-C2B223KYEPB/Y	Ceramic	.022 25 V (C)	
C113,114,271	RN-ECK-C2F104ZYEPB/Y	Ceramic	.1 25 V (C)	
C115	RN-ECK-CB1E223K-1/TY	Ceramic	.022 25 V (C)	
C116,117,204 206,209~211 213,230,231 340,343,348	RN-ECK-C2F473ZYHPB/Y	Ceramic	.047 50 V (C)	
C201,205,234 283,284,332 342,350	RN-ECK-C2B103MYHPB/Y	Ceramic	.01 50 V (C)	
C202,203,262 299,301,307	RN-ECK-C2B102MYHPC/Y	Ceramic	1000p 50 V (C)	
C214,219,252 253,337	RN-ECE-M1R0V50-303/TT	Electrolytic	1 50 V	
C215	RN-ECE-MR10V50-5/TT	Electrolytic	.1 50 V	
C217	RN-ECE-M100V16-11	Electrolytic	10 16 V	
C218	RN-ECC-C2SL330JYHPB/Y	Ceramic	33 p 50 V (C)	
C220	RN-ECC-C2SL151JYHPB/Y	Ceramic	150 p 50 V (C)	
C221,235,273 275,276,281 282,290,293 294,295,320	RN-ECE-M4R7V25-303/TT	Electrolytic	4.7 25 V	
C222	RN-ECC-C2SL471JYHPC/Y	Ceramic	470 p 50 V (C)	
C223,247,260 261,291	RN-ECE-M470V10-405/TT	Electrolytic	47 10 V	
C224	RN-ECK-C2B682MYHPB/Y	Ceramic	6800p 50 V (C)	
C226	RN-ECC-C2RH391JYHPB/Y	Ceramic	390 p 50 V (C)	
C227	RN-ECE-MR22V50-303/TT	Electrolytic	.22 50 V	
C229	RN-ECE-M3R3V50-303/TT	Electrolytic	3.3 50 V	
C233	RN-ECK-C2B332MYHPB/Y	Ceramic	3300p 50 V (C)	
C239	RN-ECC-C2SL331JYHPC/Y	Ceramic	330 p 50 V (C)	
C240,285,286	RN-ECK-C2B472MYHPC/Y	Ceramic	4700p 50 V (C)	
C241,322,323	RN-ECE-M220V16-303/TT	Electrolytic	22 16 V	
C250,251	RN-ECC-C2SL821JYHPC/Y	Ceramic	820 p 50 V (C)	
C254,255	RN-ECE-M101V6R-405/TT	Electrolytic	100 6.0V	
C258,259	RN-ECK-C2B183KYEPB/Y	Ceramic	.018 25 V (C)	
C262,299,301 307	RN-ECE-M102V10-7	Electrolytic	1000 10 V	
C264,303	RN-ECE-M470V16-610	Electrolytic	47 16 V	
C265,277,302 324	RN-ECK-C2B222MYHPB/Y	Ceramic	2200p 50 V (C)	
C266,268,304 305	RN-ECE-M101V10-52/TT	Electrolytic	100 10 V	
C267,298	RN-ECE-M101V16-613	Electrolytic	100 16 V	
C269,270	RN-ECE-M470V16-405/TT	Electrolytic	47 16 V	
C272	RN-ECE-M221V16-613/TT	Electrolytic	220 16 V	
C278,309,311 321	RN-ECH-R104V50-4/TP	M.P.	.1 50 V	
C279,292	RN-ECE-M101V16-615	Electrolytic	100 16 V	
C287,288	RN-ECE-MR47V50-303/TT	Electrolytic	.47 50 V	
C289,341,344	RN-ECE-M100V16-303/TT	Electrolytic	10 16 V	
C296,297,308 310,328,329,	RN-ECC-C2SL221JYHPB/Y	Ceramic	220 p 50 V (C)	
C330,333	RN-ECY-MR10V16-M1/TP	Tantalum	.1 16 V	
C331	RN-ECE-M2R2V50-9/TT	Electrolytic	2.2 50 V	
C334	RN-ECY-M4R7V16-M1/TP	Tantalum	4.7 16 V	
C335	RN-ECE-M221V10-612/TT	Electrolytic	220 10 V	
C336	RN-ECE-M2R2V50-303/TT	Electrolytic	2.2 50 V	
C338	RN-ECC-C2CH100DYHPB/Y	Ceramic	10 p 50 V (C)	
C339	RN-ECC-C2CH220JYHPB/Y	Ceramic	22 p 50 V (C)	
C345	RN-ECK-DB102KY	Ceramic	1000p	
C346	RN-ECE-M221V25-3	Electrolytic	220 25 V	
C347	RN-ECX-C183V05-12	Super-capacitor	.018F 05 V	
CI1	RN-ECI-A271-1	Filter	270p	
CV201	RN-ECV-A20-128	Trimmer	20P	
RESISTORS			Unit:ohm, K=kohm	
R101	RN-ERG-I2B221JR-1/Y	Metallic	220 5% 1/10W (C)	
R102,104,105 212,213,222 233,239,240 277,286,289 292,299	RN-ERG-I2B473JR-1/Y	Metallic	47 K 5% 1/10W (C)	
R103,302,303 306,322,323 373	RN-ERG-I2B473JR-1/Y	Metallic	47 K 5% 1/10W (C)	
R106,107,221 274,304,319 344,347,348 364	RN-ERG-I2B103JR-1/Y	Metallic	10 K 5% 1/10W (C)	
R108~110,113 225,266,267	RN-ERG-I2B332JR-1/Y	Metallic	3.3K 5% 1/10W (C)	
R111	RN-ERG-I2B681JR-1/Y	Metallic	680 5% 1/10W (C)	

Symbol. No.	Stock No.	Parts name	Description Chip:(C)	Remark
R112	RN-ERG-IC681J-1/TY	Metallic	680 5% 1/8W (C)	
R114,115,203 206,223	RN-ERG-I2B331JR-1/Y	Metallic	330 5% 1/10W (C)	
R116~119	RN-ERG-I2B822JR-1/Y	Metallic	8.2K 5% 1/10W (C)	
R201,202,372	RN-ERG-I2B472JR-1/Y	Metallic	4.7K 5% 1/10W (C)	
R207,252,253	RN-ERG-I2B680JR-1/Y	Metallic	68 5% 1/10W (C)	
R208,229,271 275,276,283 332,371	RN-ERG-I2B101JR-1/Y	Metallic	100 5% 1/10W (C)	
R209,228,254 255	RN-ERG-I2B682JR-1/Y	Metallic	6.8K 5% 1/10W (C)	
R210,214,216 230,241,242	RN-ERG-I2B223JR-1/Y	Metallic	22 K 5% 1/10W (C)	
R211,227,231 360	RN-ERG-I2B224JR-1/Y	Metallic	220K 5% 1/10W (C)	
R215,297,298	RN-ERG-I2B122JR-1/Y	Metallic	1.2K 5% 1/10W (C)	
R217,235,260 265,287,288 333,334,365	RN-ERG-I2B222JR-1/Y	Metallic	2.2K 5% 1/10W (C)	
R218,284,361	RN-ERG-I2B103JR-1/Y	Metallic	10 K 5% 1/10W (C)	
R220,281,300 307,345,346	RN-ERG-I2B102JR-1/Y	Metallic	1 K 5% 1/10W (C)	
R224	RN-ERG-I2B123JR-1/Y	Metallic	12 K 5% 1/10W (C)	
R225,266,267	RN-ERG-I2B332JR-1/Y	Metallic	3.3K 5% 1/10W (C)	
R226	RN-ERG-I2B152JR-1/Y	Metallic	1.5K 5% 1/10W (C)	
R232,236	RN-ERG-I2B684JR-1/Y	Metallic	680K 5% 1/10W (C)	
R234	RN-ERG-I2B333JR-1/Y	Metallic	33 K 5% 1/10W (C)	
R237,250,251	RN-ERG-I2B563JR-1/Y	Metallic	56 K 5% 1/10W (C)	
R238,261,264 329	RN-ERG-I2B104JR-1/Y	Metallic	100K 5% 1/10W (C)	
R256,257	RN-ERG-I2B124JR-1/Y	Metallic	120K 5% 1/10W (C)	
R258,259	RN-ERG-I2B272JR-1/Y	Metallic	2.7K 5% 1/10W (C)	
R268,269	RN-ERG-I2B562JR-1/Y	Metallic	5.6K 5% 1/10W (C)	
R270,273,285 301	RN-ERG-IC1ROK-1/TY	Metallic	1 10% 1/8W (C)	
R278	RN-ERD-DF2R2J-3	Carbon	2.2 5% 1/2W	
R295,296	RN-ERG-I2B154JR-1/Y	Metallic	150K 5% 1/10W (C)	
R320,321,349 350	RN-ERG-IC222J-1/TY	Metallic	2.2K 5% 1/8W (C)	
R324,325,370	RN-ERG-I2B470JR-1/Y	Metallic	47 5% 1/10W (C)	
R330,331 335~336,357	RN-ERG-I2B392JR-1/Y	Metallic	3.9K 5% 1/10W (C)	
R337~343,351 352,358	RN-ERG-I2B473JR-1/Y	Metallic	47 K 5% 1/10W (C)	
R366~369	RN-ERG-I2B2R2JR-1/Y	Metallic	2.2 5% 1/10W (C)	
RV1(S215)	RN-ERV-1P4-1005	Variable	VOL,POWER,FAD.10Kx2 50Kx2	○
RV101,102	RN-ERV-1N2-1009	Variable	BASS 20Kx2	○
RV103,104,105	RN-ERV-1N3-1002	Variable	TRE,BAL. 5Kx2,20K	○
RV201,206	RN-ERV-ON1-240	Variable	2K	
RV202	RN-ERV-ON1-237	Variable	300	

Symbol. No.	Stock No.	Parts name	Description Chip:(C)	Remark
RV203	RN-ERV-ON1-246	Variable	50K	
RV204	RN-ERV-ON1-243	Variable	10K	
RV205	RN-ERV-ON1-242	Variable	5K	
SEMICONDUCTORS				
D1	RN-EDS-1N5401U21B/FO	Silicon diode		○
D201,206,207 208,210,217 219,226	RN-EDS-MA151WK/TY	Silicon diode	Mark:MT (C)	○
D202,223,231	RN-EDS-MA153/TY	Silicon diode	Mark:MC (C)	○
D203	RN-EDS-MA151WA/TY	Silicon diode	Mark:MN (C)	○
D204,205 212~216,218 224,230,234 235	RN-EDS-MA151K/TY	Silicon diode	Mark:MH (C)	○
D211	RN-EDT-RD9R1MB3/TY	Zener diode	9.1V Mark:913 (C)	○
D225	RN-EDT-RD7R5MB3/TY	Zener diode	Mark:753 (C)	○
D227,228	RN-EDS-1A3	Silicon diode		○
D232,233	RN-EDT-RD180M/TY	Zener diode	Mark:181,182,183 (C)	○
IC101	RN-EIC-M5218L	Linear-monolithic IC		○
IC201	RN-EIC-BA401	Linear-monolithic IC		○
IC202	RN-EIC-LA1143	Linear-monolithic IC	FM IF AMP.&Q.DET	○
IC203	RN-EIC-AN7465S	Linear-monolithic IC		○
IC204	RN-EIC-LA3161	Linear-monolithic IC	EQ.AMP.	○
IC206	RN-EIC-BA4558	Linear-monolithic IC		○
IC207,208	RN-EIC-UPC1310V	Linear-monolithic IC	POWER AMP.	○
IC209	RN-EIC-AN6540	Linear-monolithic IC	8.5V	○
IC210	RN-EIC-S81250HG	Linear-monolithic IC	5 V	○
IC211	RN-EIM-UPD1719G-555	Digital-monolithic IC		○
Q101,102,210 211	RN-EVS-DTC314TK/TY	Silicon transistor	Mark:H04 (C)	○
Q201~203,206 207,221,222 224,241,243 246,247,252 253	RN-EVS-DTC144EK/TY	Silicon transistor	Mark:26 (C)	○
Q204,205,208 209,230,231	RN-EVS-2SD601-QRS/TY	Silicon transistor	Mark:YQ,YR,YS (C)	○
Q212	RN-EVS-DTA114TK/TY	Silicon transistor	Mark:94 (C)	○
Q213,229,239 242	RN-EVS-DTA114EK/TY	Silicon transistor	Mark:14 (C)	○
Q220,223	RN-EVF-2SJ106-YGB/TY	FET	Mark:VY,VG,VB (C)	○
Q225	RN-EVS-2SD973-QRS	Silicon transistor		○
Q226,232,233 235,250	RN-EVS-2SB815-67/TY	Silicon transistor	Mark:B6,B7 (C)	○
Q227,236	RN-EVS-2SC2532/TY	Silicon transistor	Mark:AN (C)	○
Q234	RN-EVS-DTC124EK/TY	Silicon transistor	Mark:25 (C)	○
Q249	RN-EVS-DTC114EK/TY	Silicon transistor	Mark:24 (C)	○
Q251	RN-EVS-DTD123YK/TY	Silicon transistor	Mark:F62 (C)	○
MISCELLANEOUS ELECTRICAL				
CF201	RN-EFC-F2-114	Ceramic filter	10.7MHz	

Symbol. No.	Stock No.	Parts name	Description Chip:(C)	Remark
J1	RN-EJA-1016	Antenna receptacle	ANT.	
J210	RN-EWI-1282A	Lead assembly	5P-5P	
J240	RN-EJU-1407-FAB15	Connector	15P	
J250	RN-EJU-1407-FAB14	Connector	14P	
J260-360	RN-EWI-1283A	Lead assembly	10P-9P	
J280	RN-EWI-1279	Lead assembly	4P-3P	
J290	RN-EWI-1274	Lead assembly	3P-3P	
J291	RN-EWI-1278	Lead assembly	8P-8P	
J292	RN-EWI-1276	Lead assembly	5P-5P	
J294	RN-EWI-1275	Lead assembly	3P-3P	
J295	RN-EWI-1273	Lead assembly	2P-2P	
J300	RN-EJU-1407-FAB08	Connector	8P	
J301	RN-EWI-1281	Lead assembly	1P-2P	
J302	RN-EWI-1280	Lead assembly	6P-5P	
L1	RN-ELL-1063	Choke	0.4mH	
L2	RN-ELL-336	Choke	2.6mH	
L201,202,204	RN-ELH-C6R8-KAL/TP	Choke	6.8uH	
L203	RN-ELH-C102-6	Choke	1 mH	
P1	RN-EJU-S16V-1357	Connector	16P	
P210	RN-EJU-4006-MAW05	Connector	5P	
P220	RN-EJU-4006-MAW04	Connector	4P	
P230	RN-EJU-4006-MAW07	Connector	7P	
P360	RN-EJU-4006-MAW09	Connector	9P	
PL201	RN-EPM-1439	Lamp assembly	14V,50mA,80mA GRN	○
PL202	RN-EPM-1400A	Lamp assembly	14V,100mA GRN	○
S201~211,213 214(P300)	RN-ESD-1042A	Push switch		○
S216	RN-ESS-12-1088	Slide switch		○
S217	RN-ESB-1N1-1019	Push switch		○
T201	RN-ETF-1023	FM IF transformer		
TV201	RN-ETV-1105	Front end		○
VE1	RN-EVE-1070	Liquid crystal element	LCD	○
VV201	RN-EVV-C10DK220	Varistor		○
X201	RN-EXD-1015	Crystal		

Illus. No.	Stock No.	Parts name	Description	Q'ty	Remark
MECHANICAL					
501	RN-MAD-1446B	Chassis	TOP	1	
502	RN-MAD-1447B	Chassis	BOTTOM	1	
503	RN-MDP-2162B	Escutcheon	Ass'y	1	○
504	RN-MRF-1041A	Heat-sink	BACK	1	
505	RN-MLF-1336C	Filter	For 503	1	
506	RN-MHE-2087A	Holder	For 503	1	
507	RN-MLC-1270B	Douser	For LCD	1	
508	RN-MSB-1253	Shield plate	LCD	1	
509	RN-MYB-2668B	Button	FF	1	○
510	RN-MYB-2669B	Button	REW	1	○
512	RN-MYB-2667A	Button	EJE	1	○
513	RN-MYC-1104	Knob	ON,VOL,PULL,FAD	1	○
514	RN-MYC-1090A	Knob	BASS,TRE,BAL	2	○
515	RN-MCV-1851	Door	DOOR	1	
516	RN-MSC-237B	Spring	For 515	1	
517	RN-MSI-1100	Pin	For 515	1	
518	RN-MLC-1265D	Douser	For 503	1	
519	RN-MIP-1660	Insulater	VOL.	1	
520	RN-MHE-2253	Holder	DACK	1	
521	RN-MIP-1659B	Insulater	MAIN	1	
522	RN-MHE-2088	Holder	DACK	1	
523	RN-MSE-2080	Spacer	For LCD	1	
525	RN-MHE-2170	Holder	For IC	1	
526	RN-MHE-2091A	Holder	For VOL.	1	
527	RN-MHE-2092B	Holder	For LCD	1	
☆530	———	PC board and parts	VOL,MAIN	1	
※531	RN-MPC-2329A	PC board	POWER	1	
※532	RN-MPC-2352A	PC board	BASS/TRE	1	
533	RN-MLC-1272	Douser	For 512	1	
538	RN-MLC-1273C	Douser	POLYESTER	1	
541	RN-MCF-15	Clamp		1	
601	RN-MTJ-1N2.6X6	Screw	2.6x6mm	3	
602	F6-SBD-3X4S	Screw	ANT	1	
603	RN-MET-253	Special screw	3X8mm	2	
605	RN-MET-147	Special screw	3X8mm	1	
607	RN-MEN-1059	Special nut		2	
608	RN-MSN-1	Nut		1	
609	F6-SBD-3X6S	Screw	3X6mm	9	
611	F6-SSA-3X6S	Screw	3X6mm	8	
612	F6-SBD-2.6X3S	Screw	2.6X3mm	4	

NOTE : 1.Specifications subject to change without prior notice.
2.It takes long time to supply some parts marked ☆ since we do not always have them in store.
In the worst case, we can't supply them for you.
3.※ marked PC board does not include component parts to be mounted.

CASSETTE DECK (MDK-78-03/S)

Illus. No.	Stock No.	Parts name	Description	Q'ty	Remark
MECHANICAL					
1	RN-MAS-1146	Chassis	Main	1	
2	RN-MYT-1363	Sub-chassis	Head plate	1	
3	RN-MYT-1364	Sub-chassis	Reel base	1	
4	RN-MUL-1515	Lever		1	
5	RN-MUL-1516	Lever	Change lever	1	
6	RN-MUL-1517	Lever	EJECT cam lock	1	
7	RN-MYT-1365	Sub-chassis	Lever bracket	1	
8	RN-MUL-1518	Lever	Program arm	1	
9	RN-MUL-1519	Lever	FR arm	1	
10	RN-MHE-2237	Holder	CM bracket	1	
11	RN-MUF-1033	Flywheel	R	1	
12	RN-MUF-1034	Flywheel	L	1	
13	RN-MKR-1229	Pinchroller mechanism	R	1	
14	RN-MKR-1230	Pinchroller mechanism	L	1	
15	RN-MKS-1037	Slip mechanism	Reel spindle	2	○
19	RN-MHE-2238	Holder	Cassette holder	1	
20	RN-MUL-1520	Lever	EJECT cam	1	
21	RN-MUL-1521	Lever	EJECT lever	1	
22	RN-MHE-2239	Holder	Cassette hanger	1	
23	RN-MHE-2240	Holder		1	
24	RN-MUL-1522	Lever		1	
25	RN-MSP-1106	Spring		1	
26	RN-MUL-1523	Lever	Center plate	1	
28	RN-MUL-1525	Lever	Change lever(B)	1	
29	RN-MUL-1526	Lever	FR arm(B)	1	
30	RN-MUL-1527	Lever	FF lever(A)	1	
31	RN-MUL-1528	Lever	REW lever(A)	1	
32	RN-MUL-1530	Lever	Lock arm(A)	1	
33	RN-MSE-2298	Spacer	Switch arm(A)	1	
34	RN-MUL-1450	Lever	EJECT button lever	1	
35	RN-MUG-1261	Gear		2	
37	RN-MUG-1262	Gear	Reduction gear(A)	1	
38	RN-MUG-1263	Gear	Reduction gear(B)	1	
39	RN-MRP-1164	Roller	Pulley gear	1	
40	RN-MHE-2241	Holder	Tape guide	1	
41	RN-MUL-1532	Lever		1	
42	RN-MUL-1533	Lever	FF arm	1	
43	RN-MUL-1534	Lever	Senser arm	1	
44	RN-MUG-1264	Gear	Selector gear	1	
45	RN-MHE-2242	Holder	Adjuster arm	1	
46	RN-MUL-1535	Lever		1	
47	RN-MUL-1536	Lever	Gear lock arm	1	
48	RN-MUG-1265	Gear		1	
49	RN-MUL-1537	Lever	TU gear arm	1	
50	RN-MUL-1538	Lever		2	
51	RN-MUL-1578	Lever	Mute arm	1	
52	RN-MUL-1539	Lever	Tape hooker	1	
53	RN-MRP-1165	Roller		1	
57	RN-MST-1174	Spacer	HP roller(B)	1	
58	RN-MST-1175	Spacer	FF roller(A)	1	
59	RN-MST-1176	Spacer		1	
60	RN-MST-1177	Spacer	HP roller(A)	1	
61	RN-MST-1186	Spacer		1	
62	RN-MST-1179	Spacer	Program arm roller	1	
64	RN-MSC-1568	Spring	For FF/REW lever	2	
65	RN-MSC-1569	Spring	For lock lever(A)	1	
66	RN-MSC-1570	Spring	For gear lock arm	1	
67	RN-MSC-1571	Spring	For EJECT lever	1	
68	RN-MSC-1572	Spring	For EJECT cam	1	
69	RN-MSC-1573	Spring	For head plate	1	
70	RN-MSC-1574	Spring	For EJECT cam lock	1	
71	RN-MSC-1575	Spring	For program arm	1	
72	RN-MSC-1576	Spring	For adjuster arm(A)	1	
73	RN-MSC-1577	Spring	For adjuster arm(B)	1	
74	RN-MSC-1578	Spring	For pinch roller(L)	1	
75	RN-MSC-1579	Spring	For pinch roller(R)	1	
76	RN-MSC-1580	Spring		1	
77	RN-MSC-1581	Spring		1	
78	RN-MSC-1582	Spring	For center plate(B)	1	
79	RN-MSW-1019	Spring		1	
80	RN-MSC-1583	Spring	For earth(R)	2	
81	RN-MSC-1616	Spring	For mute arm	1	
82	RN-MSC-1584	Spring		2	
☆83	————	PC board and parts		1	
84	RN-EWI-1528	Lead assembly		2	
85	RN-MUB-1061	Belt	Sub(B)	1	○
86	RN-MSW-1020	Spring		1	
87	RN-MUB-1062	Belt	Main	1	○
88	RN-MSE-2261	Spacer	CH cushion	1	
89	RN-MSW-1021	Spring		1	
90	RN-MST-1180	Spacer		1	
91	RN-MCF-1035	Clamp		1	
92(J230)	RN-EWJ-5494	Lead assembly	With 7P connector	1	
93(M901)	RN-EDM-1115	DC motor		1	○
※94	RN-MPM-3453	PC board		1	
95	RN-EWI-1449	Lead assembly	60mm(BLK)	1	
96	RN-EWI-1450	Lead assembly	60mm(RED)	1	
97	RN-EWI-1451	Lead assembly	55mm(YEL)	1	
98(A1)	RN-EHM-C42-1066	Playback head		1	○
99(S901)	RN-ESM-1023	Micro switch	Power switch	1	○
101(S902)	RN-ESL-1052	Leaf switch	Mute switch	1	○

Illus. No.	Stock No.	Parts name	Description	Q'ty	Remark
102(S903)	RN-ESS-32-1090	Slide switch		1	○
103(C901)	RN-ECK-DB103K-1	Ceramic	.01	1	
104(J220)	RN-EWJ-5495	Lead assembly	With 4P connector	1	
105	F6-ER-1.5	E-type ring	1.5mm	4	
106	RN-MHJ-1005	Ring	1.6x3.2mm	2	
107	F6-ER-2	E-type ring	2mm	4	
108	F6-ER-2.5	E-type ring	2.5mm	3	
111	RN-MWP-1114	Washer		3	
112	RN-MWP-1115	Washer		4	
113	RN-MWP-1116	Washer		2	
114	RN-MWS-1065	Washer		1	
115	RN-MET-1530	Special screw	2X5mm	1	
116	RN-MET-1363	Special screw	1.7x6mm	1	
117	RN-MET-1505	Special screw	2x3mm	4	
118	RN-MET-1364	Special screw	2x4mm	1	
120	RN-MET-1507	Special screw	2x4mm	1	
121	RN-MET-1358	Special screw	2x2.5mm	2	
122	RN-MET-1508	Special screw	2x4mm	1	
123	RN-MET-1509	Special screw	2x3mm	1	
124	RN-MET-1510	Special screw	2x5mm	2	
125	RN-MET-1511	Special screw	2x5mm	2	
126	RN-MET-1512	Special screw	2x5mm	1	
127	RN-MET-1513	Special screw	2x7mm	2	
128	F6-SBD-2.6X3S	Screw	2.6x3mm	3	

NOTE : 1.Specifications subject to change without prior notice.
2.It takes long time to supply some parts marked ☆ since we do not always have them in store.
In the worst case, we can't supply them for you.
3.※ marked PC board does not include component parts to be mounted.

SCHEMATIC

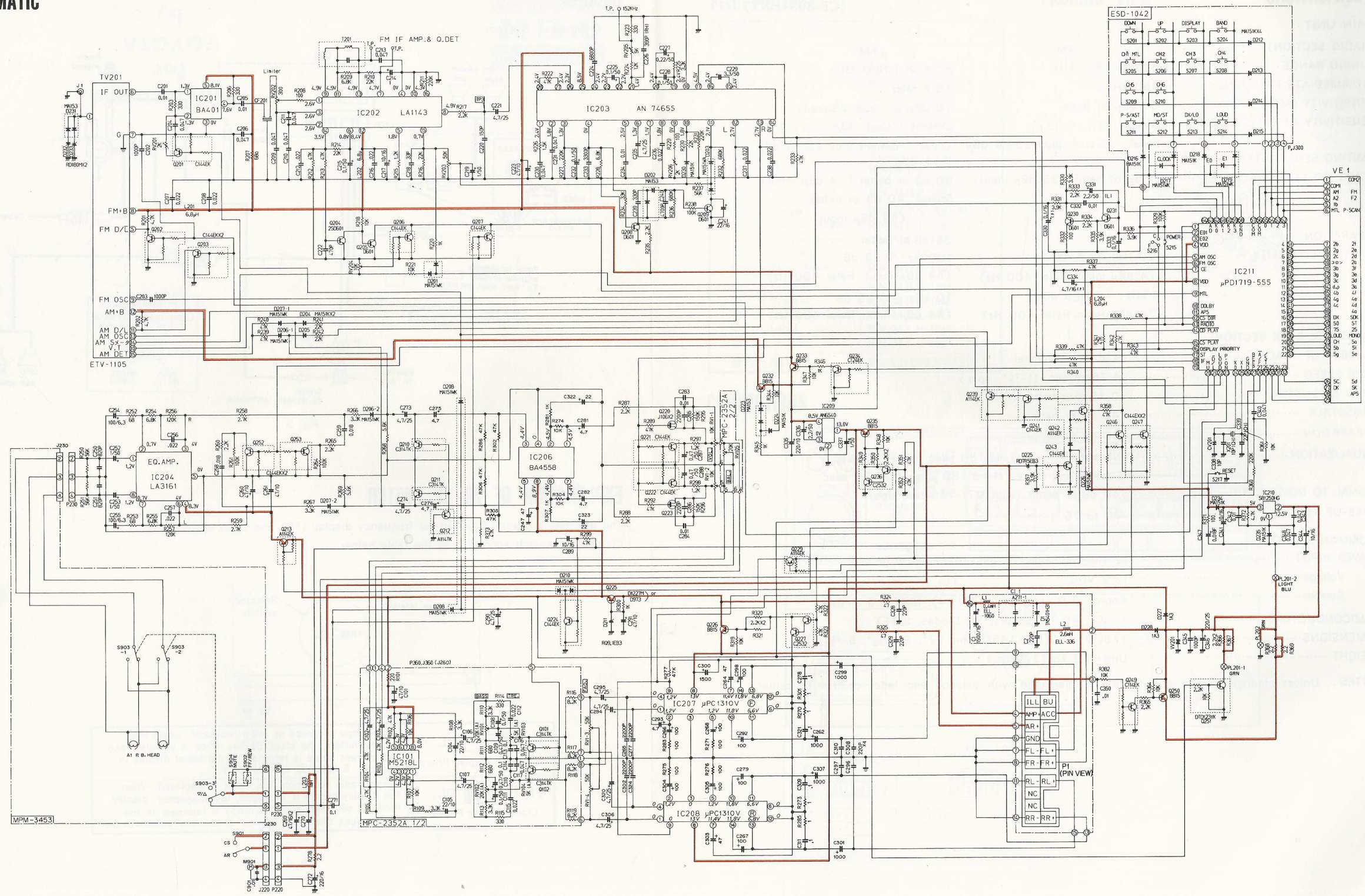

NOTES: 1. All capacitance in Micro farad, $P=10^{-12}$
2. All resistance in ohm, $K=10^{3}$

Fig. 5

3. All inductance in henry, $m=10^{-3}$, $\mu=10^{-6}$
4. DC voltages against the chassis measured with 10M ohms digital volt meter, power supply set at +13.2 VDC, no signal input.

WIRING ON PC BOARD

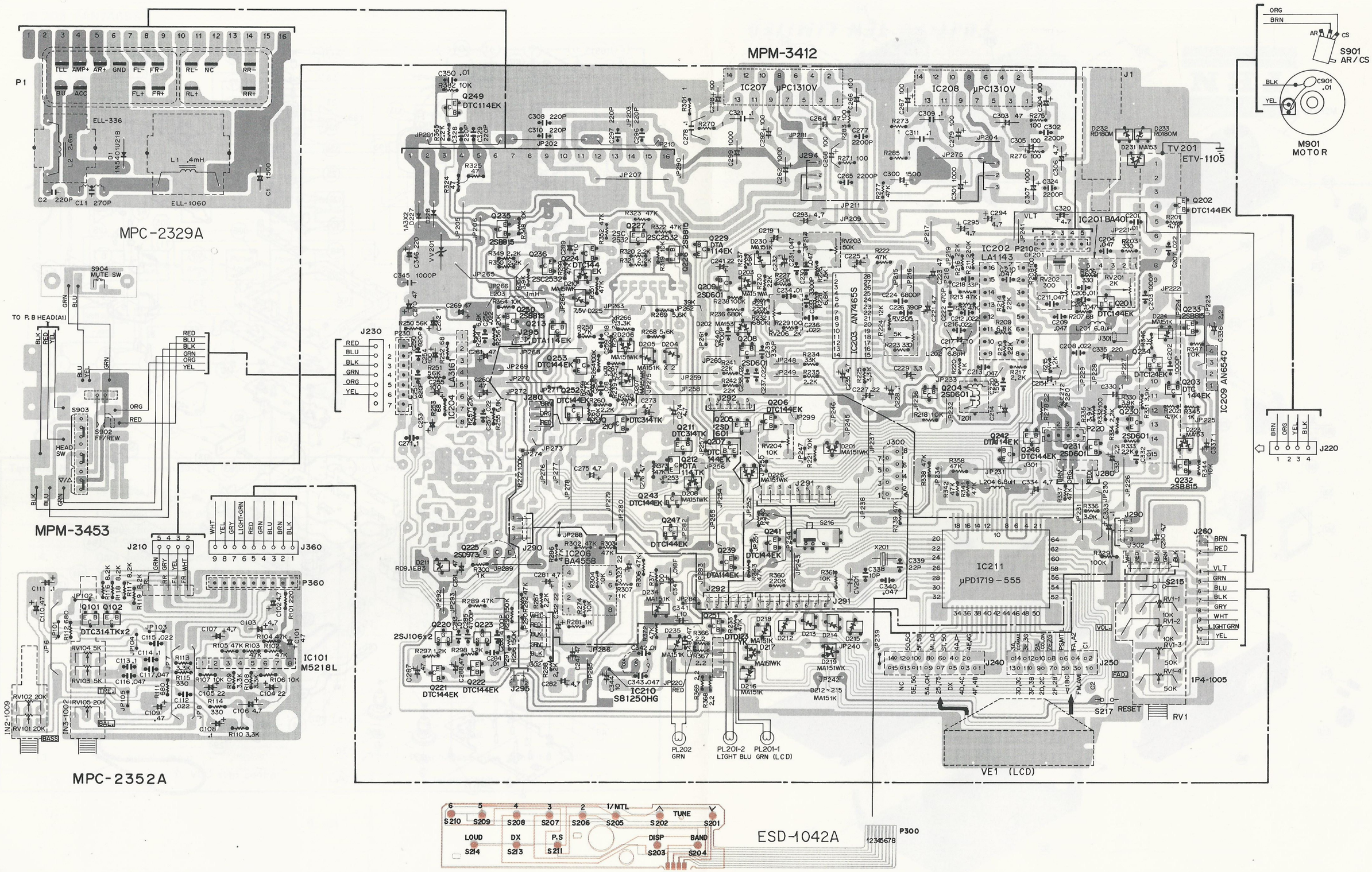

Fig. 6